Section 352 & Europa Clipper

Final Presentation

Summer 2021

Juan Carrano

Jet Propulsion Laboratory
California Institute of Technology

Outline

- About Me
- Europa Clipper Overview
- DTM Vault Strain Gauge Installation and Testing
- Propulsion Cylinder Transportation Options
- Crate Proof Testing
- AMMS Adapter Plate Proof Test Analysis
- What I Learned This Summer
- Roses and Thorns
- Thanks!

About Me

- Rising Senior at Georgia Tech
- Mechanical Engineering Major
  - Concentration in Automation and Robotic Systems
- Grew up in a lot of places

Hobbies and Interests

- I like to play basketball, cook, hike, ski, and most outdoor activities
- I also like to build things
  - Invention Studio Makerspace at Georgia Tech

Past Experiences

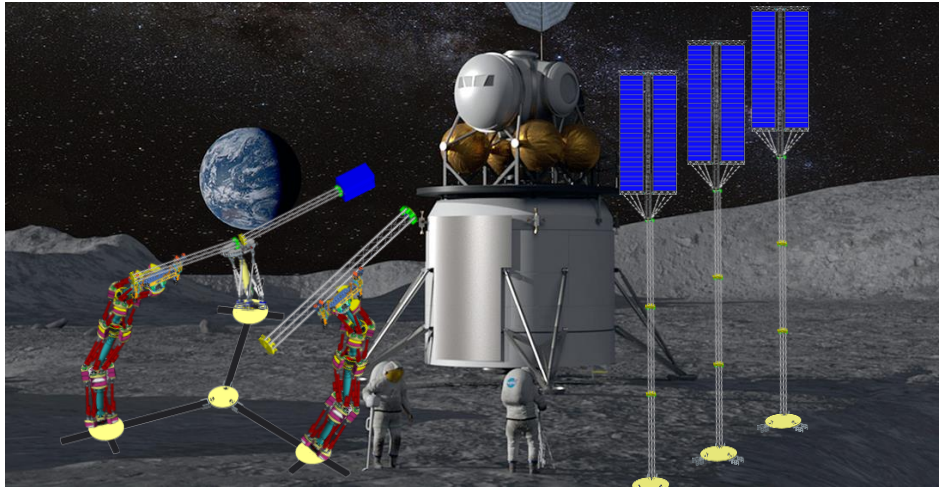

Gulfstream

Europa Clipper Overview

Primary Science Objectives

1. Confirm and constrain the depth to the subsurface ocean, provide information on ocean salinity, and determine processes of surface ice - ocean exchange.
2. Identify the composition and sources of key non-ice constituents on the surface and in the atmosphere, including any carbon-containing compounds.
3. Produce a ≤100-m spatial-scale map over ≥30% of the surface, and determine the three-dimensional characteristics of major landform types at higher resolution.

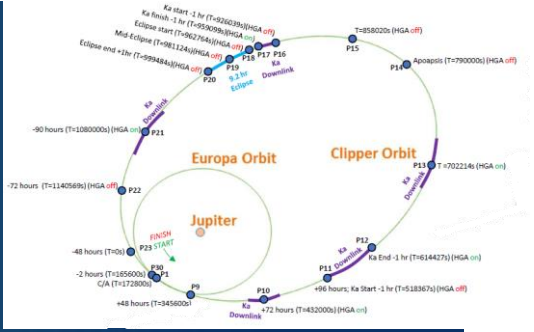

Mission Implementation:

Partners	**JPL (Project & Payload mgmt., science, avionics module, HRS system, I&T activities, Mission operations, science processing)** **APL (Propulsion Module, RF Module, Solar Arrays and actuators)** **GSFC (Propulsion)**
Risk	**Category 1 project per NPR 7120.5** **Risk Class (8705.4) Class A**
Orbit	**Europa (45-48), Ganymede (5-7), Calisto (5-9)** **10-14 Day Period**
Duration	**3.7-3.8 yrs**
Payload (11)	**REASON, MISE, UVS, SUDA, EIS WAC, EIS NAC, MASPEX, Radiation Monitor, E-Themis, PIMS, Magnetometers**

Vault Overview

- The Vault is the primary source of radiation protection for instruments and S/C electronics
- Provides Primary Structural Support to internal electronics, external instrument sensors, Nadir Platform, and RF Antenna Boom
- Comparable in size to M2020 Rover Chassis

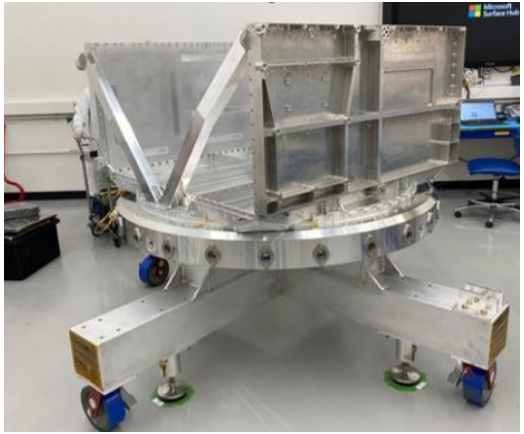

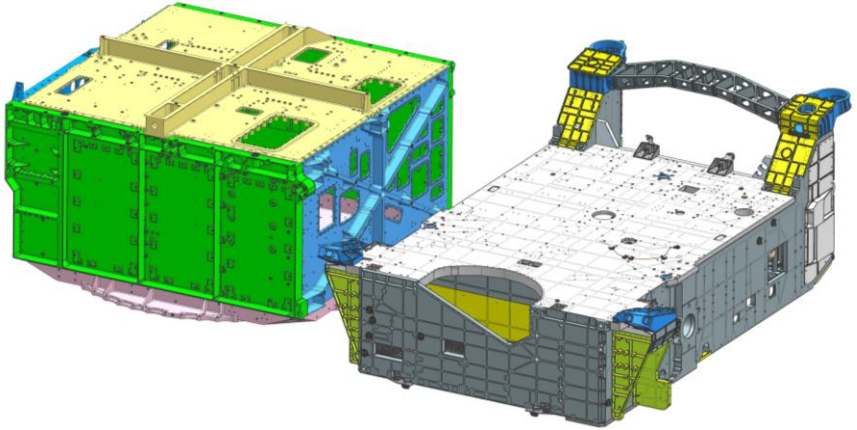

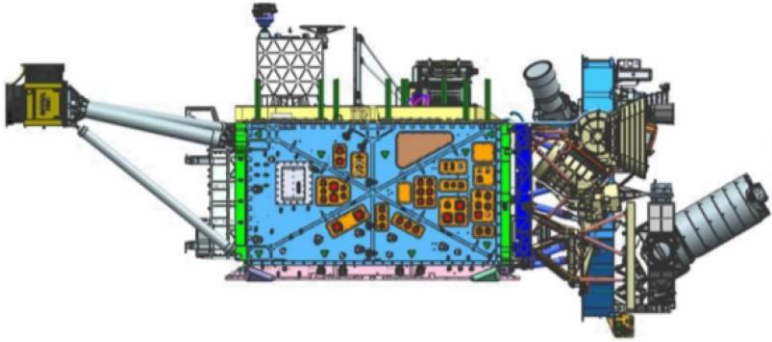

Europa Clipper DTM Program

- The primary goal of the DTM Program is to perform **Static and Modal tests** on a Europa Clipper DTM Spacecraft
- While assembling the DTM Spacecraft for Static and Modal testing, the plan is to perform these additional tests:
  - **DTM Vault EMI Test**
  - **DTM Vault Hinge Mechanism Functional Test** *(new addition since Mechanical CDR)*
- Validates FEM results, verifies safety of assembly procedures, and increases familiarity with any new hardware

1

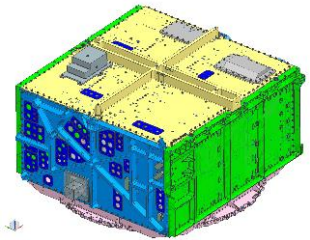

DTM Vault EMI Test

2

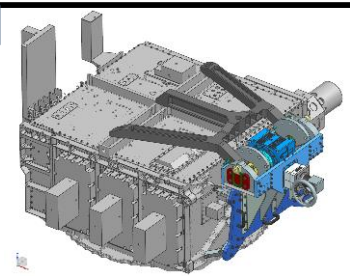

DTM Vault Hinge Mechanism Test

3

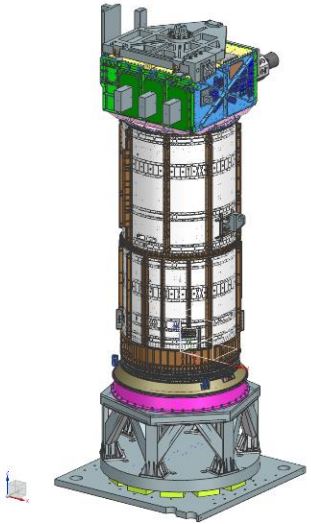

DTM S/C Static Test

4

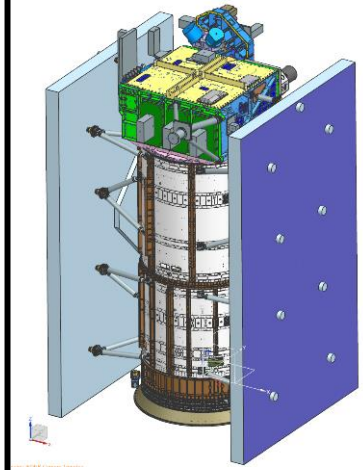

DTM S/C Modal Test

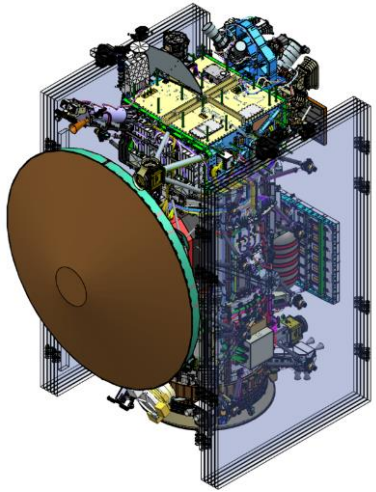

Flight Spacecraft

Strain Gauge Installation on DTM Vault

- Worked on strain gauge models, locations, and installation documentation
  - For ATA Engineering and JPL's use during before, during, and after installation
- Pre-Installation
  - Updated strain gauge information and model after changes
  - Locations, orientations, and wire locations for each strain gauge
- Post-Installation
  - Actual locations and updated coordinates for stress team to analyze

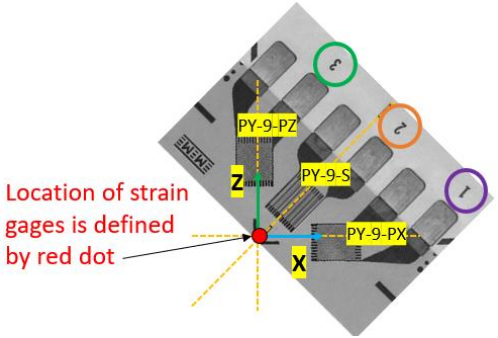

Before the dash – location of strain gauge

After the first dash – strain gauge number

After the second dash – orientation along S/C CS, with S being the slanted orientation (45 deg)

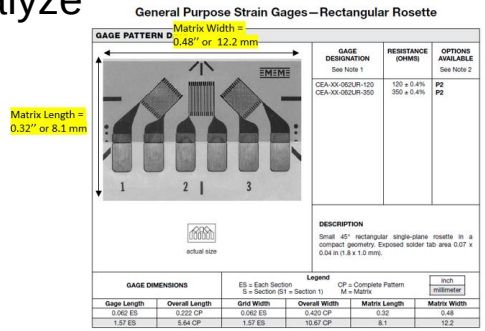

Location of Strain Gauges on +Z Panel

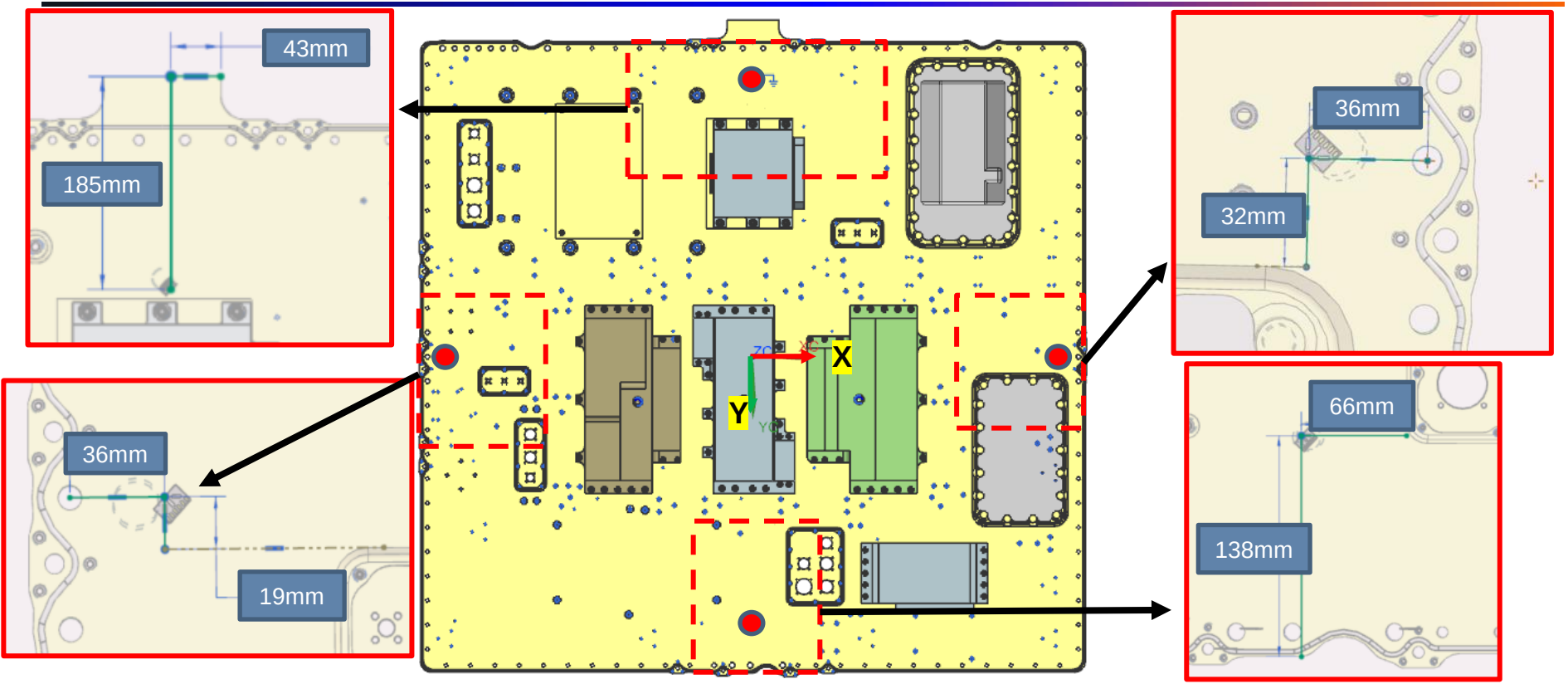

Orientation of Strain Gauges on +Z Panel

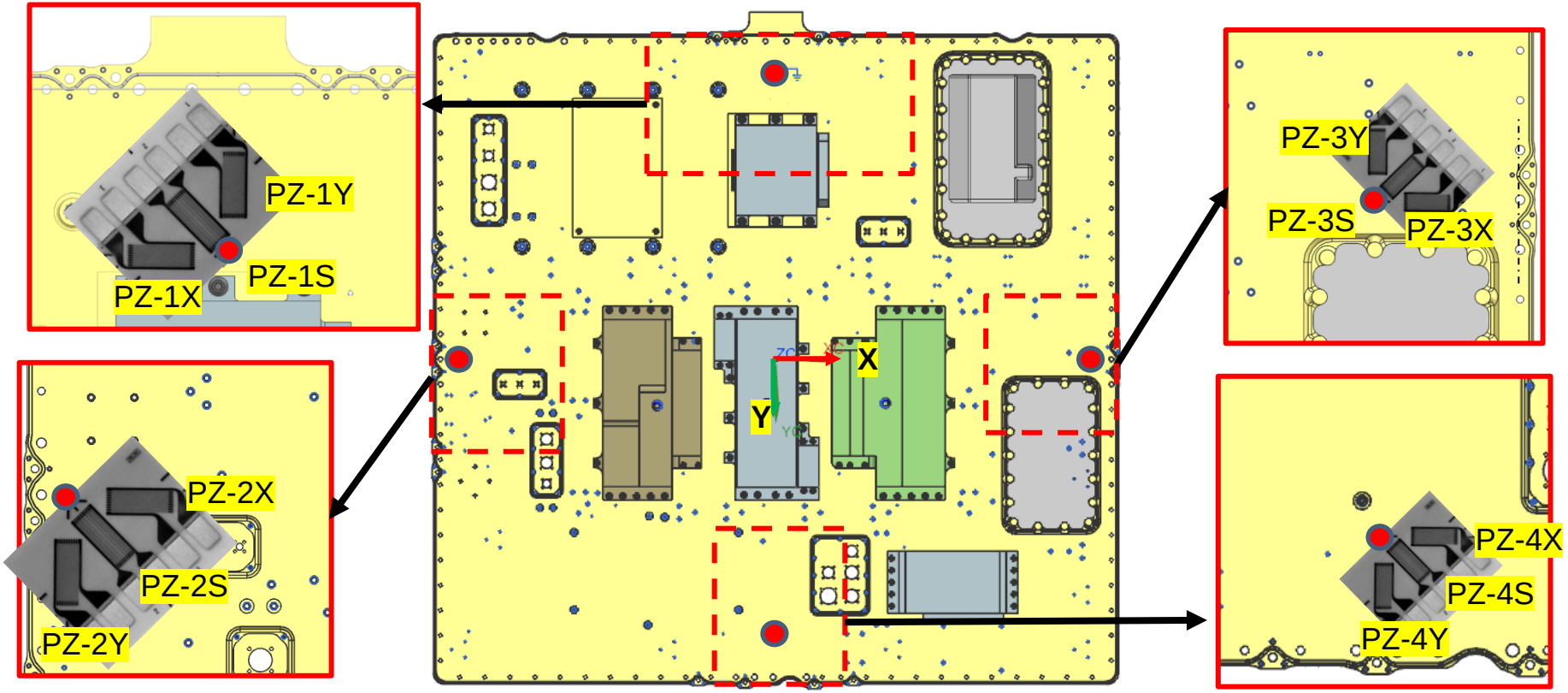

Wiring of +Z Panel Strain Gauges

Routed such that all strain gauge wires will collect on –X side of S/C CS

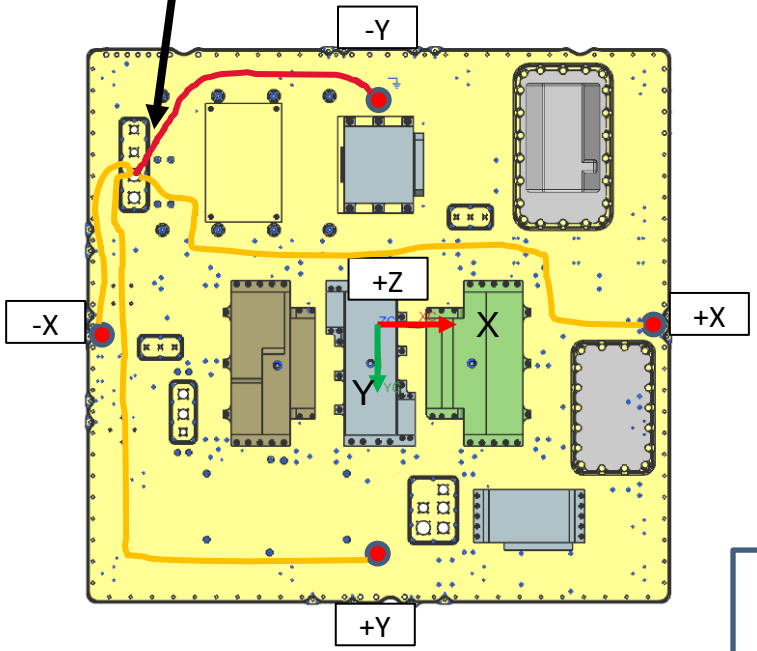

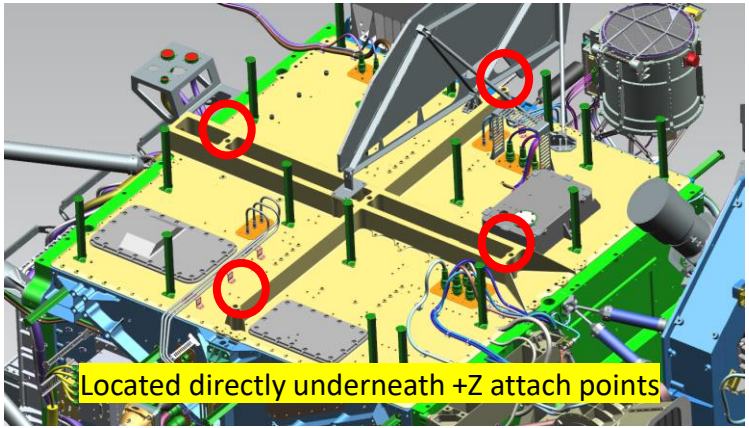

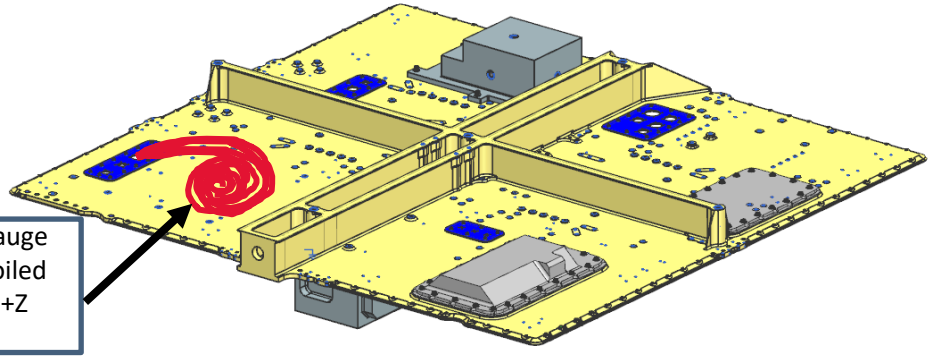

Excess strain gauge wires can be coiled and taped to +Z panel

Location of Strain Gauges on +Z Panel: #2

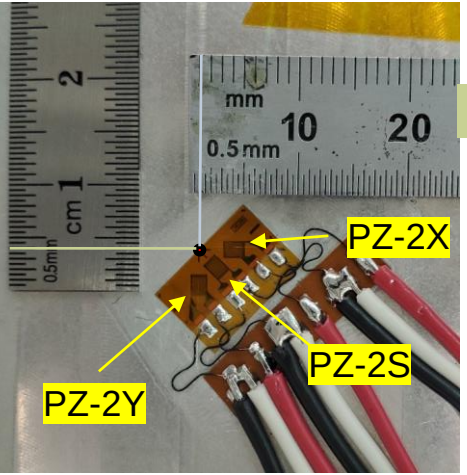

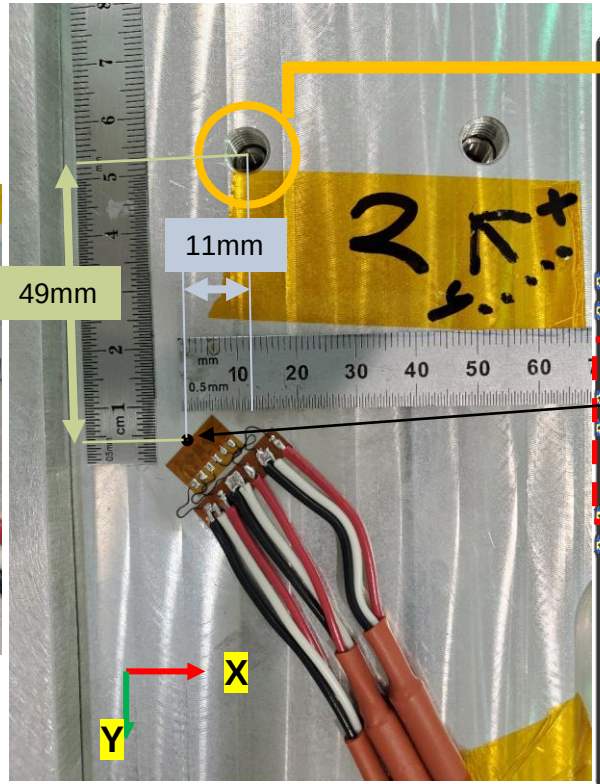

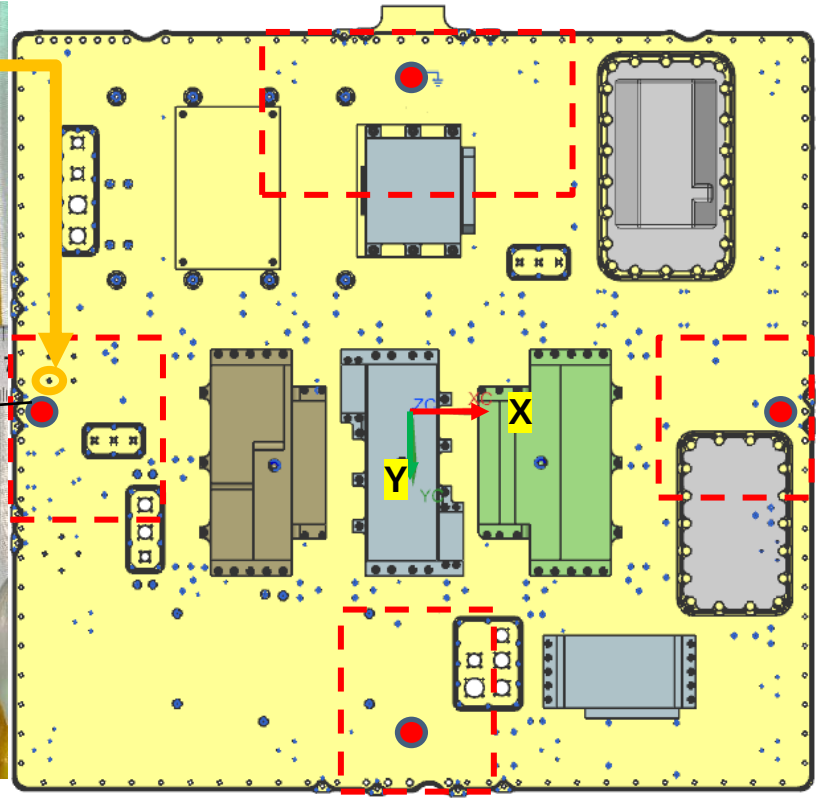

Strain Gauges Installed on DTM Vault – Measured Values

Strain Gauge #	Label	Description	X Coordinate (mm)	Y Coordinate (mm)	Z Coordinate (mm)	Lead Wire Gage Resistance (Ohm)
1	PZ-1X, PZ-1S, PZ-1Y	Interior +Z panel lift point on –Y side	7.0000	-477.0533	3773.6000	(350X, 350S ,350Y)
2	PZ-2X, PZ-2S, PZ-2Y	Interior +Z panel lift point on –X side	-606.0000	-1.0000	3773.6000	(351X, 350S, 350Y)
3	PZ-3X, PZ-3S, PZ-3Y	Interior +Z panel lift point on +X side	606.9000	-1.0000	3773.6000	(350X, 350S, 351Y)
4	PZ-4X, PZ-4S, PZ-4Y	Interior +Z panel lift point on +Y side	0.7000	474.8900	3773.6000	(350X, 350S, 351Y)
5	MY-5Z, MY-5S, MY-5X	Interior –Y panel lift point, left side of leftmost SHR	483.0828	-603.7200	3722.6000	(350Z, 350S, 351X)
6	MY-6Z, MY-6S, MY-6X	Interior –Y panel lift point, right side of leftmost SHR	420.0828	-603.7200	3722.6000	(350Z ,350S , 350X)
7	MY-7Z, MY-7S, MY-7X	Interior –Y panel lift point, left side of rightmost SHR	-404.5877	-603.7200	3723.7265	(350Z , 350S , 350X)
8	MY-8Z, MY-8S, MY-8X	Interior –Y panel lift point, right side of rightmost SHR	-468.5877	-603.7200	3721.7265	(350Z , 351S, 351X)
9	PY-9Z, PY-9S, PY-9X	Interior +Y panel lift point, left side of SHR	-23.7348	603.7200	3701.6000	(350Z, 350S ,350X)
10	PY-10Z, PY-10S, PY-10X	Interior +Y panel lift point, right side of SHR	76.2652	603.7200	3703.6000	(350Z, 350S, 350X)
11	PY-11Z, PY-11S, PY-11X	Interior +Y panel, midway down bolted region on –X side	-591.1000	603.7200	3377.8500	(350Z ,350S , 350X)
12	MX-12Z, MX-12S, MX-12Y	Interior –X panel, midway down bolted region on +Y side	-637.1000	566.7200	3407.1500	(350Z, 350S, 350Y)
13	MZ-13Y, MZ-13S, MZ-13X	Interior –Z panel, top of rib on +Y side	-31.5500	581.9700	3112.1000	(350Y ,350S , 350X)
14	MZ-14Z, MZ-14S, MZ-14X	Interior –Z panel, flange of rib on –X, +Y side	-69.7500	599.4650	3086.1881	(350Z, 350S, 350X)
15	MZ-15Z, MZ-15S, MZ-15X	Interior –Z panel, flange of rib on +X, +Y side	-4.7500	599.4650	3071.3720	(350Z ,350S , 350X)
16	MZ-16Z, MZ-16S, MZ-16Y	Interior –Z panel, side of rib on –X, +Y side	-35.75	561.32	3075.1000	(350Z, 350S, 350Y)
17	MZ-17Z, MZ-17S, MZ-17Y	Interior –Z panel, side of rib on +X, +Y side	-27.7500	556.4683	3074.0964	(350Z, 350S, 350Y)

Propulsion Cylinder Problem Statement

- A solution is needed for the transportation/storage needs for the DTM propulsion modules for Europa Clipper
- When these cylinders are transported to JPL we don’t get to keep the carts
- We are robust to schedule changes if we have to store the cylinders
- At the end of DTM program these cylinders need to be stored

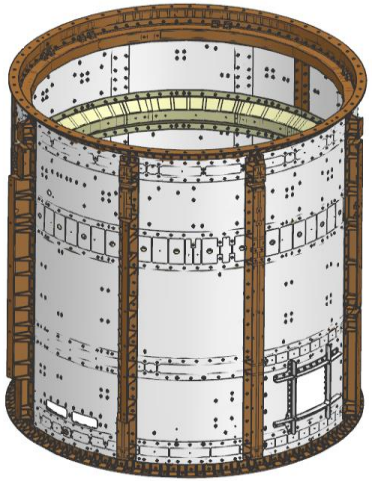

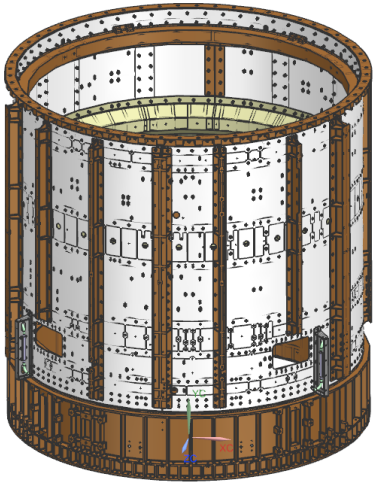

Original Cart Concept

- Transport Cart to move cylinders around JPL campus
- Based off of cart design from APL
- Modified specifically for JPL use
  - Removed unnecessary components
  - Reduced custom machined part count
  - Redesigned new adapter plate
  - Replaced fasteners and lift rings

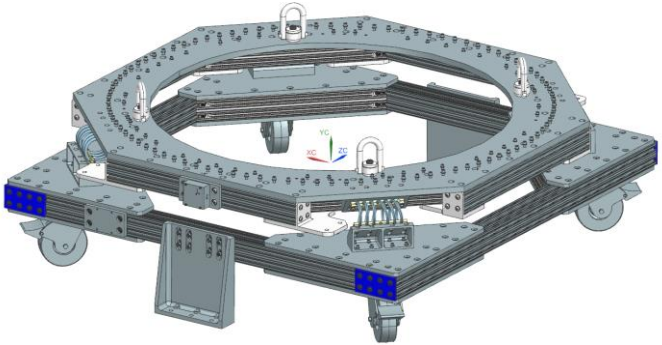

APL Cart

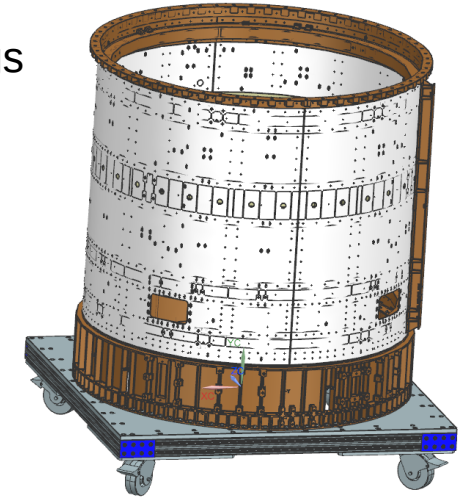

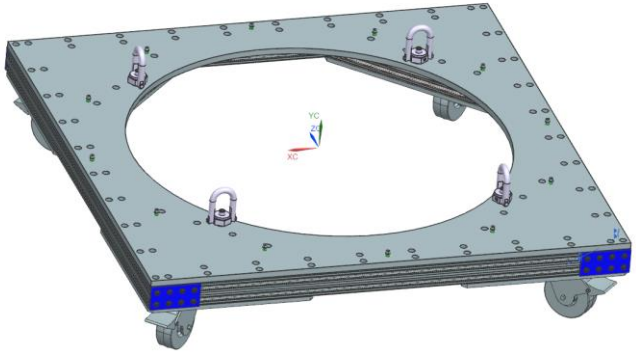

JPL Cart Concept

Cart to Propulsion Cylinder Interface 1

- Adapter plate has two different bolt patterns for the two propulsion cylinders
- Cylinders can be rotated to match with the pattern depending on which cylinder is on the plate

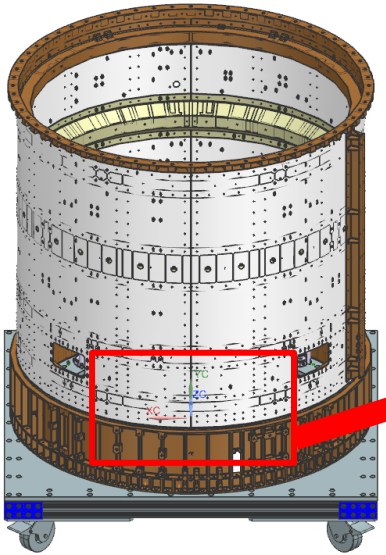

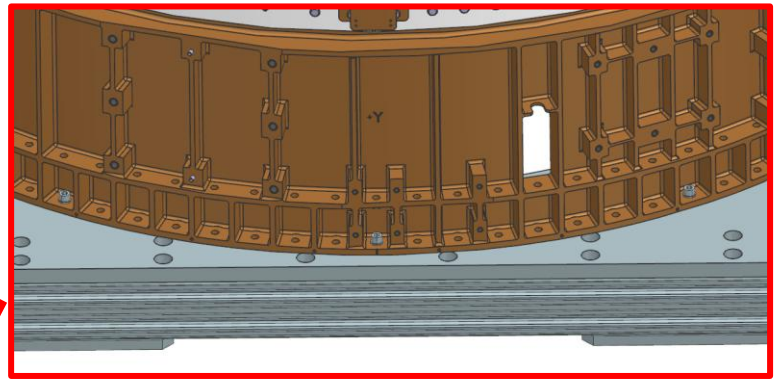

12 bolts spaced 30° apart

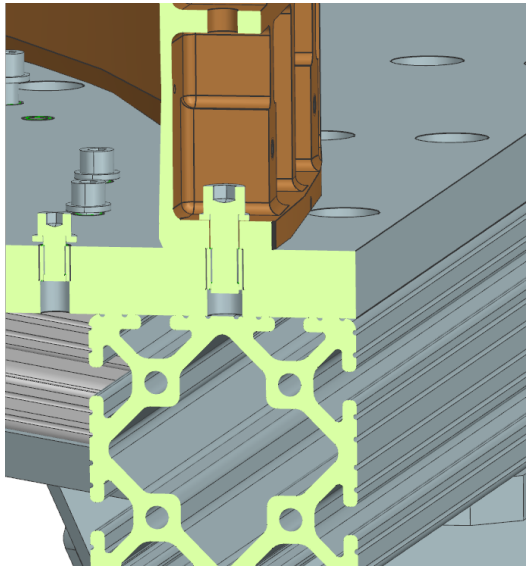

Cross Section View of Bolt Interface

Cart to Propulsion Cylinder Interface 2

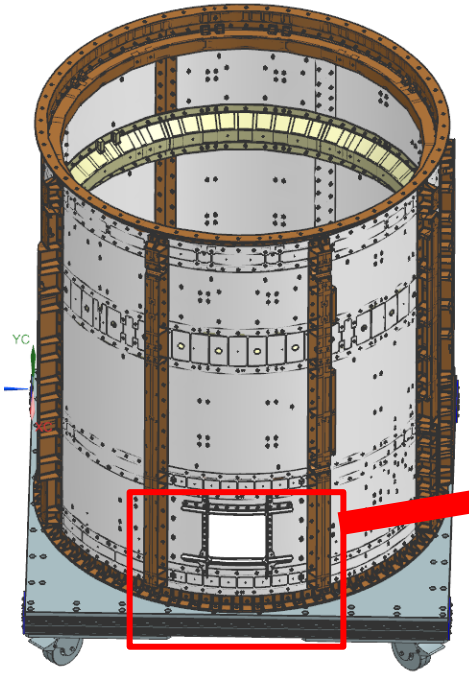

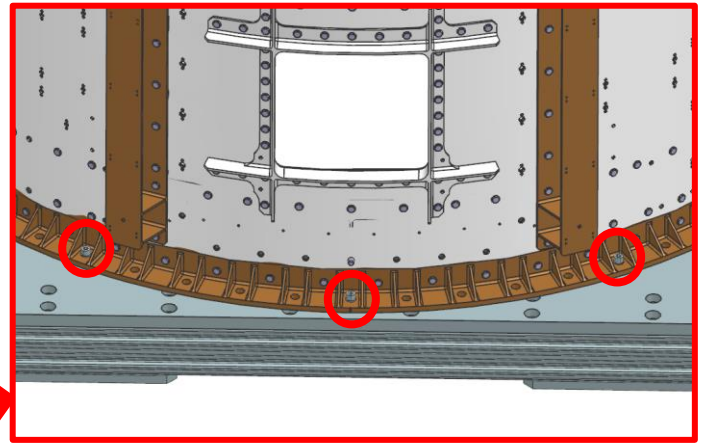

12 bolts spaced 30° apart

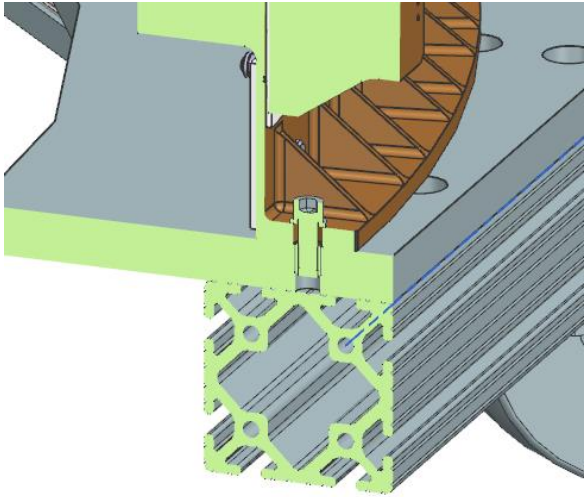

Cross Section View of Bolt Interface

Crate Concept

- Crate can also move the cylinders and store them at the end of the program
- Adapter plate fixed to base of crate instead of cart
- Much lower in material and support costs
- Simpler for assembly and amount of parts
- Worked with Valley Box to design crate that works for both cylinders

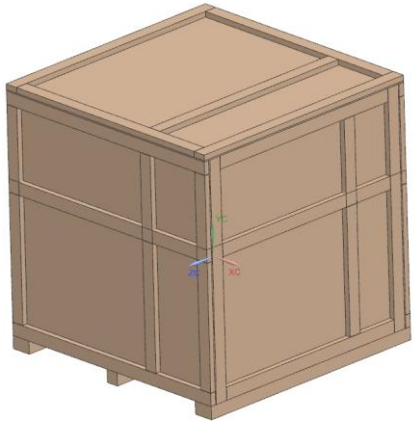

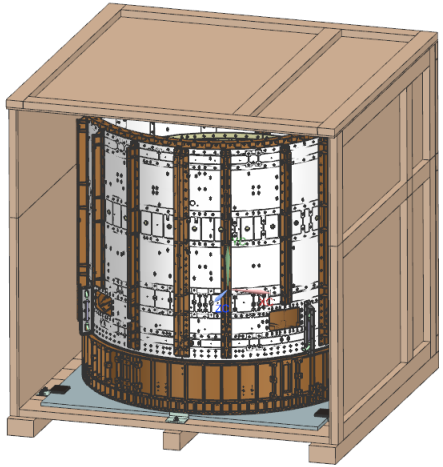

Material Cost of Cart vs. Crate

Propulsion Cylinder Transport Cart						
Part	Name	Quantity Needed	Order Quantity	Cost per Unit	Total Cost	Notes
AUTO-00781265/A1	8020 (3030)	2		$ 93.96	$ 187.92	58" long (3" x 3") ($1.62 per inch)
AUTO-00781269/A1	8020 (3030)	2		$ 84.24	$ 168.48	52" long (3" by 3") ($1.62 per inch)
AUTO-00781260/A1	8020 (2560)	4		$ 41.37	$ 165.48	24" long (1.5" by 3") cut at 45 deg angles on ends
AUTO-00781262/A1	15 Series 8 Hole - Rectangular Flat Plate (4365)	4		$ 7.40	$ 29.60	
AUTO-00781293/A1	15 Series 8 Hole - Gusseted Inside Corner Bracket (4338)	4		$ 9.67	$ 38.68	
AUTO-00781275/A1	Corner Plate	2		$ 1,000.00	$ 2,000.00	Custom Machined Estimate
AUTO-00781276/A1	Corner Plate Mirrored	2		$ 1,000.00	$ 2,000.00	Custom Machined Estimate
AUTO-00781267/A1	Samson Casters with Polypropylene Wheels (30305T772)	4		$ 60.28	$ 241.12	
AUTO-00781257/A1	5/16-18 x .687" Flanged Button Head Socket Cap Screw (3330)	64		$ 0.39	$ 24.96	16 in 00781257, 48 in 00781289 ASM
AUTO-00781280/A1	5/16-18 Double Slide-in Economy T-Nut (3279)	24		$ 0.86	$ 20.64	
AUTO-00781253/A1	5/16-18 x .687" Black FBHSCS with Slide-In Economy T-Nut (3320)	92		$ 0.69	$ 63.48	
AUTO-00781251/A1	NAS1149E0663R Washer	16		$ 0.80	$ 12.80	
AUTO-00781290/A1	3/8" - 24 High-Strength Grade 8 Steel Hex Head Screws (92620A654)	16		$ 0.31	$ 4.92	
AUTO-00781125/A1	NAS1394C6 Keensert	16		$ 5.22	$ 83.52	
					$ -	
JC-Clipper-Prop-Adapter-Plate	Propulsion Cylinder Adapter Plate	1		$ 3,000.00	$ 3,000.00	Custom Machined Estimate
AUTO-00781277/A1	NAS1394C5 Keensert	12		$ 4.39	$ 52.68	
AUTO-00781288/A1	NAS1149E0563R Washer	12		$ 1.29	$ 15.48	
AUTO-00781272/A1	NAS1351N5-14 Screw	12		$ 7.50	$ 90.00	
AUTO-00781298/A1	5/16-18 x .687" Flanged Button Head Socket Cap Screw (3607)	88		$ 0.96	$ 84.48	
AUTO-00781151/A1	5/16-18 Slide-in Economy T-Nut (3678)	88		$ 0.69	$ 60.72	
CL-2500-SHR-1/A	CL-2500-SHR-1 Swivel Hoist Rings	4		$ 92.75	$ 371.00	
				Total Price Per Cart	**$ 8,715.96**	
				Total Prive x2 Carts	**$17,431.92**	

Adapter Plates and Crates						
Part	Name	Quantity Needed	Order Quantity	Cost per Unit	Total Cost	Notes
JC-Clipper-Prop-Adapter-Plate	Propulsion Cylinder Adapter Plate	1		$ 3,000.00	$ 3,000.00	Custom Machined Estimate
AUTO-00781277/A1	NAS1394C5 Keensert	12		$ 4.39	$ 52.68	
AUTO-00781288/A1	NAS1149E0563R Washer	12		$ 1.29	$ 15.48	
AUTO-00781272/A1	NAS1351N5-14 Screw	12		$ 7.50	$ 90.00	
TBD	Valley Box Crate	1		$ 2,100.00	$ 2,100.00	
				Total Price Per Crate	**$ 5,258.16**	
				Total Prive x2 Carts	**$10,516.32**	

The cost information contained in this document is of a budgetary and planning nature and is intended for informational purposes only. It does not constitute a commitment on the part of JPL and/or Caltech.

Total Cost of Cart vs. Crate

	Prop Cart Assembly Activities	Support	Duration (days)	Cost
Cart	Designer to Generate Four Drawings	1	4	$ 6,400.00
	Manufacture Engineer Support	1	5	$ 8,000.00
	CogE Stress Analysis	1	5	$ 8,000.00
	Tech Install 28 inserts across two adapter plates	1	2	$ 2,400.00
	Techs Assemble Two Carts	6	2	$ 14,400.00
	Techs Proof Test Assembly Carts	4	1	$ 4,800.00
			Total Support Cost	$ 44,000.00
			Total Material Cost	$ 17,431.92
			Total Cart Cost	**$ 61,431.92**

Assume Designer rate $200/hr, assume 8hr days
Assume ME rate $200/hr, assume 8hr days
Assume Tech rate $150/hr, assume 8hr days

	Prop Cart Design Activities	Support	Duration (days)	Cost
Crate	Designer to Generate 1 Drawings	1	1	$ 1,600.00
	Manufacture Engineer Support	1	5	$ 8,000.00
	Techs Install 28 inserts across two adapter plates	1	2	$ 2,400.00
	Techs Assemble Two Crates	6	1	$ 7,200.00
	Techs Proof Test Crates	4	1	$ 4,800.00
			Total Support Cost	$ 24,000.00
			Total Material Cost	$ 10,516.32
			Total Cart Cost	**$ 34,516.32**

Crate Savings over Cart	**$26,915.60**
Percent Reduction	**44%**

The cost information contained in this document is of a budgetary and planning nature and is intended for informational purposes only. It does not constitute a commitment on the part of JPL and/or Caltech.

Hand Calculations for Cylinder to Adapter Plate

- Using 12 bolts (NAS1351N5-14) margin of safety was determined for shear and axial loads
  - Used safety factor of 5

Load Case 1: Axial Load in Z direction at Prop Cylinder Centroid

Moment Generated	$M_1 := F_V \cdot C_z = 518.094\ in \cdot lbf$
Moment Divided by Radius of Bolt Pattern	$F_{BT1} := \frac{M_1}{r_B} = 18.738\ lbf$
Force on Bolts divided by number of Bolts	$F_{B1} := \frac{F_{BT1}}{n} = 3.123\ lbf$
Max Total Tension Force per Bolt	$T := F_{B1} + \frac{F_V}{n_t} = 53.289\ lbf$
Compression Force per Bolt caused by Vertical Force	$C := \frac{F_V}{n_t} = 50.166\ lbf$
Preload to Tension Ratio	$R := \frac{F_P}{T \cdot 5} = 10.922$
Margin of Safety	$MOS_1 := R - 1 = \boxed{9.922}$

Load Case 2: Load in X/Y direction at Prop Cylinder Centroid

Coefficient of Static Friction	$\mu := 0.2$
Moment Generated	$M_2 := F_H \cdot C_y = (2.011 \cdot 10^3)\ in \cdot lbf$
Moment Divided by Radius of Bolt Pattern	$F_{BT2} := \frac{M_2}{r_B} = 72.732\ lbf$
Force on Bolts divided by number of Bolts	$F_{B2} := \frac{F_{BT2}}{n} = 12.122\ lbf$
Allowable Bolt Shear Load on Bolts for Load Case 2	$P_{Ab2} := (F_P - F_{B2}) \cdot \mu = 579.576\ lbf$
Margin of Safety (all shear load on one bolt)	$MOS_2 := \frac{P_{Ab2}}{F_H \cdot 5} - 1 = \boxed{0.54}$

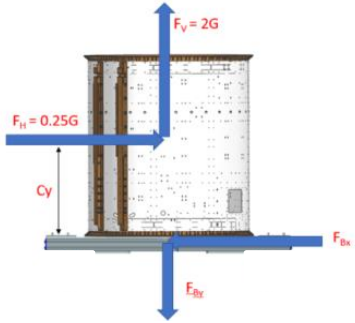

Table C1. DS83A, DS132, DS136A, NAS1216, NAS1578C, NAS1351N, NAS1352N, NAS6303-6320 or NAS6703-6720 Fasteners into Key-Locked Inserts in Al 6061-T6

Thread Size	Miniature and Lightweight Inserts								
	Torque for Standard Preload (lb·in)								
	Solid Film Lubricated Threads			Grease or Solithane on Threads			Bare Threads		
	Preload (lbs)	Head: Lubricated	Head: Bare	Preload (lbs)	Head: Lubricated	Head: Bare	Preload (lbs)	Head: Lubricated	Head: Bare
.0600-80	144	1.0	2.1	144	1.2	2.1	126	1.5	2.6
.0860-56	212	2.1	4.6	212	2.6	4.6	212	3.7	6.4
.1120-40	408	5.2	11	408	6.6	11	408	9.4	16
.1380-32	444	7.0	15	444	8.9	15	444	12	21
.1640-32	903	17	37	903	21	37	903	30	52
.1900-32	1600	35	76	1600	44	76	1522	60	102
.2500-28	2910	83	183	2910	105	183	2852	147	251
.3125-24	4116	148	324	4116	186	324	4116	266	453
.3750-24	5804	250	548	5804	315	548	5804	450	766
.4375-20	7648	385	843	7648	485	843	7648	692	1178
.5000-20	9686	557	1220	9686	702	1220	9686	1002	1705

Crate Proof Test Forklift

Fix adapter plate to base of crate using brackets provided by Valley Box

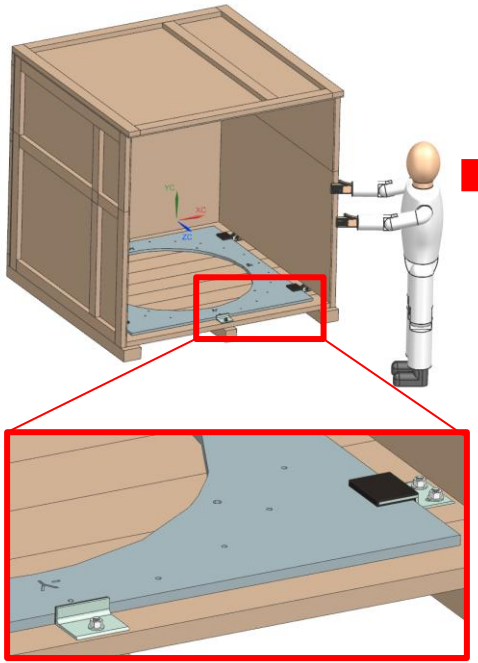

Add proof weight (3x weight of cylinder)

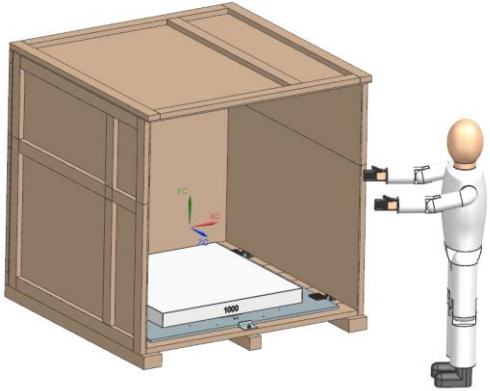

Lift crate with forklift and move around facility

Crate Proof Test Crane

Fix adapter plate to base of crate using brackets provided by Valley Box

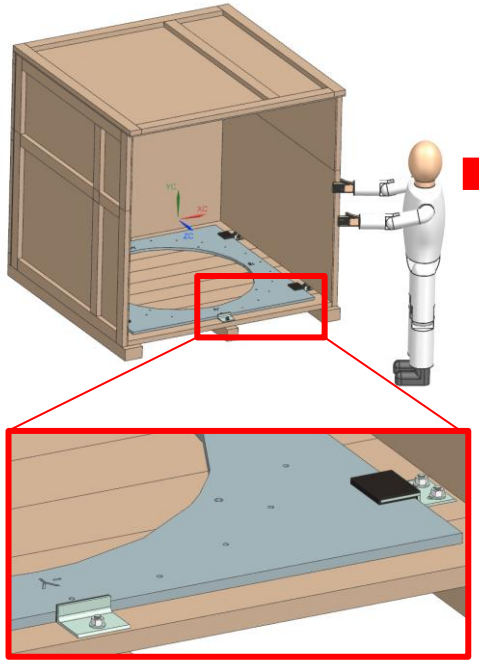

Add proof weight (3x weight of cylinder)

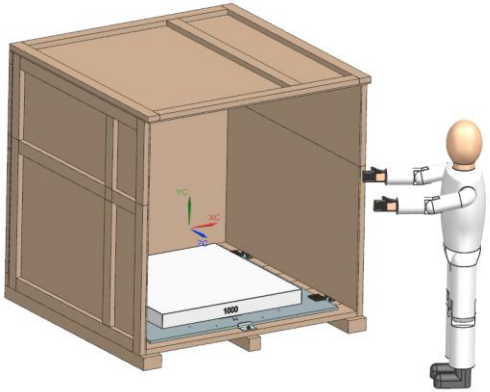

Lift crate with crane and move around facility

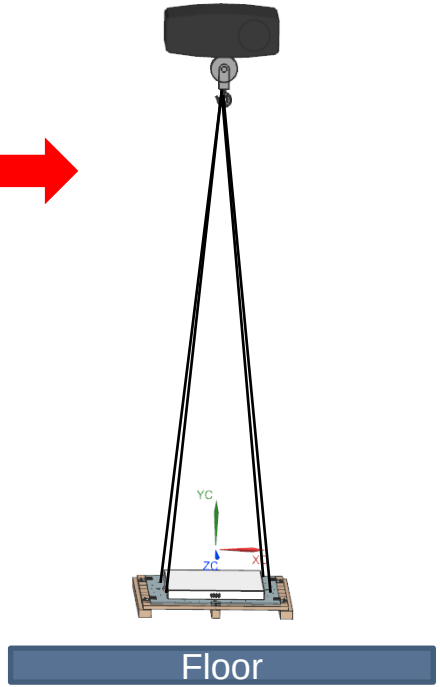

AMMS Proof Test Problem Statement

- Multiple lift options for adapter plate were identified
- Needed to determine best lift option for loads on bolt pattern

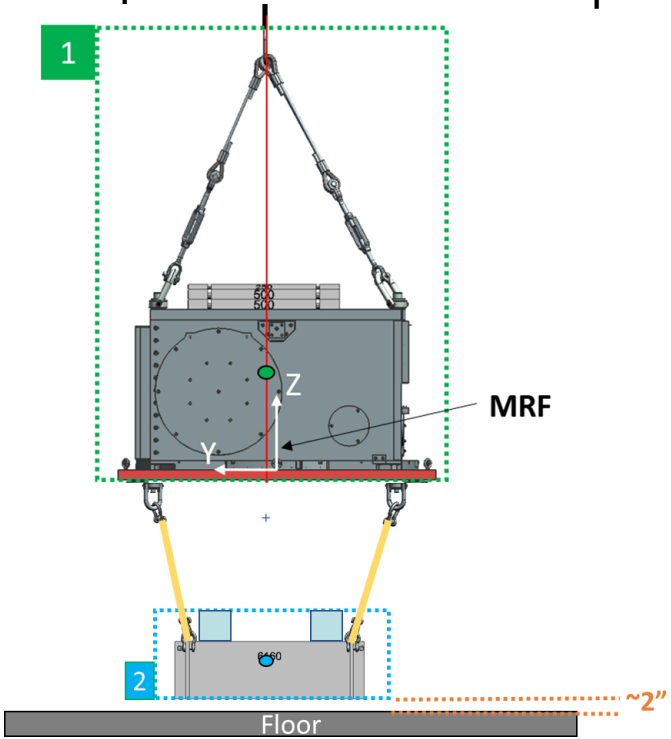

Different Lifting Configurations

- Lift configuration (Case #1) on AP is identified by yellow circles
- Lift configuration (Case #2) on AP is identified by red X's

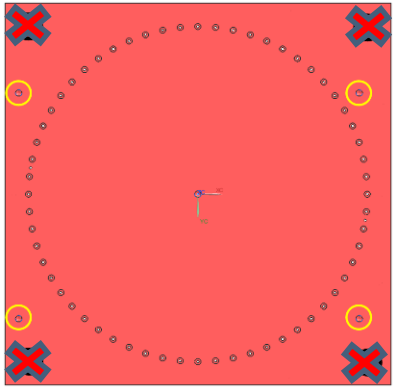

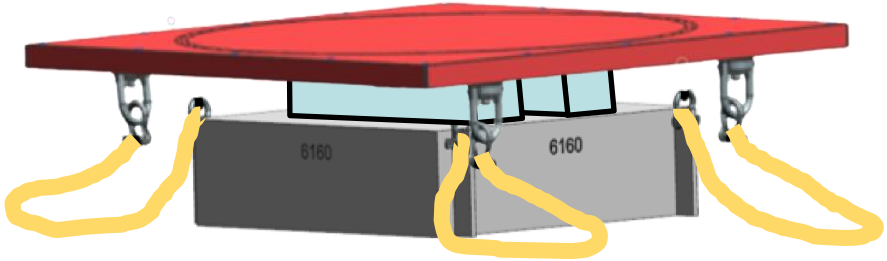

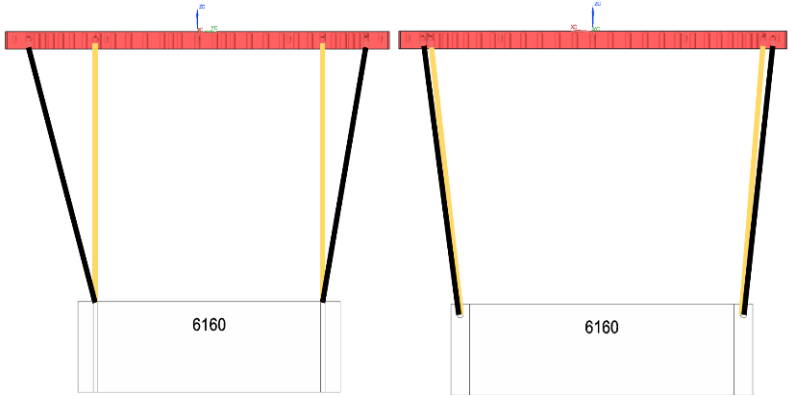

Case #1 Results

- Holes are numbered 1-62 starting at the +Y top hole and going clockwise

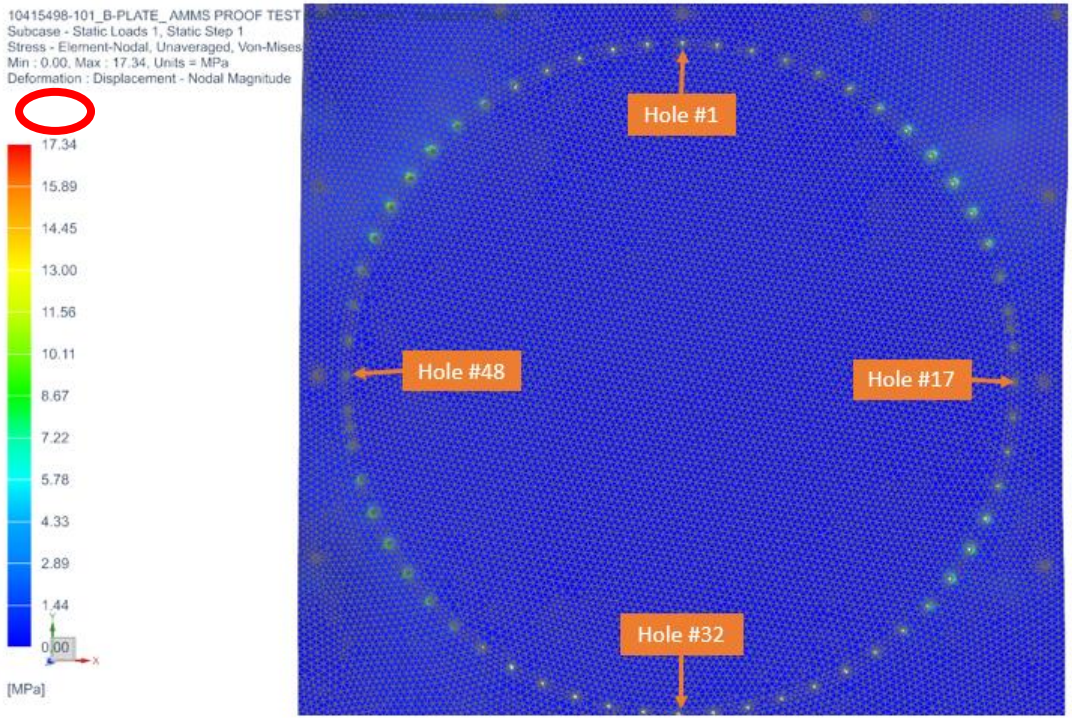

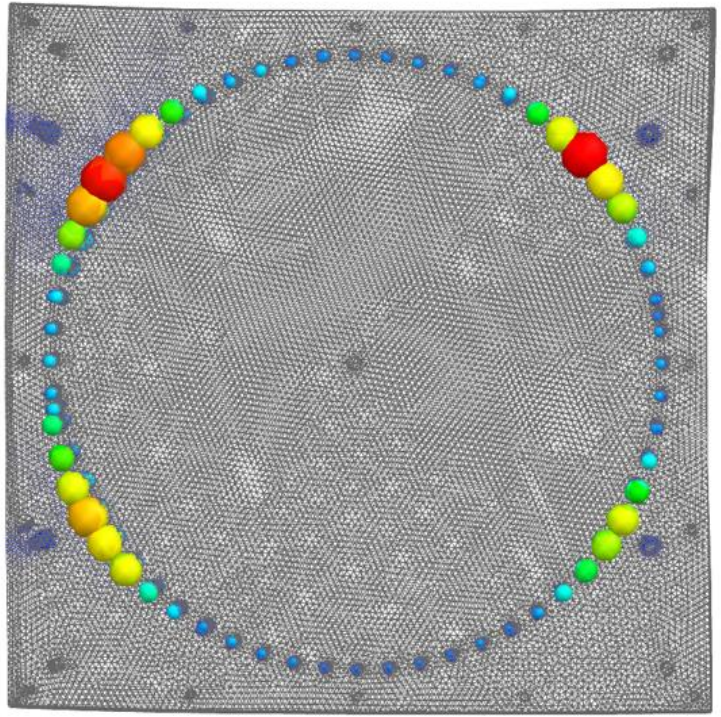

Case #2 Results

- Holes are numbered 1-62 starting at the +Y top hole and going clockwise

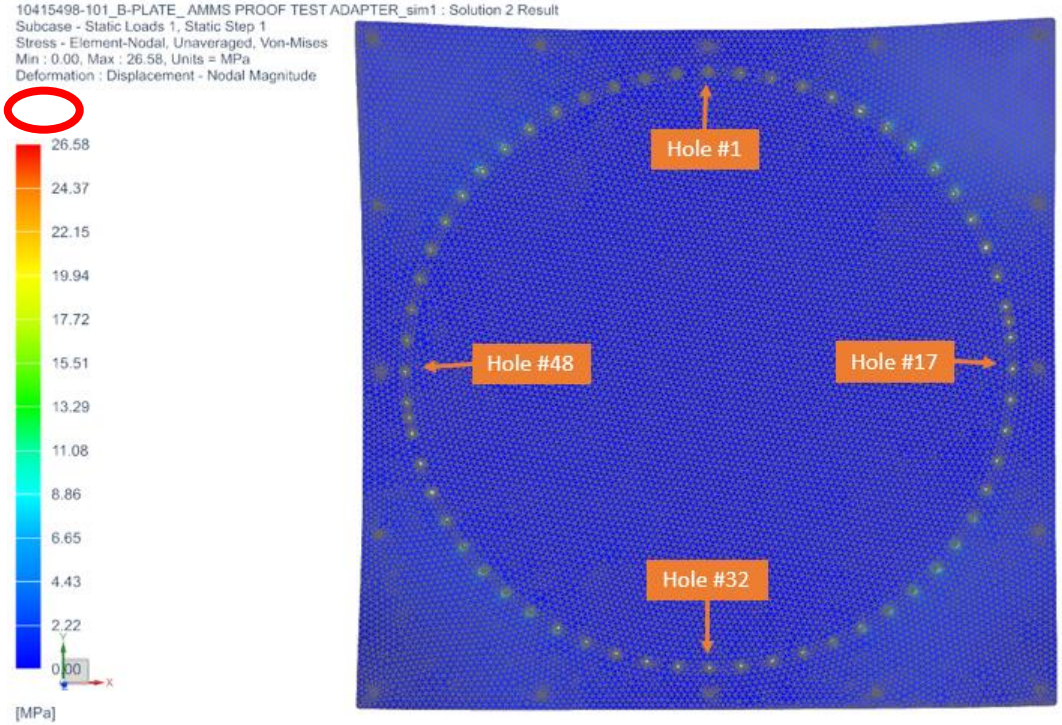

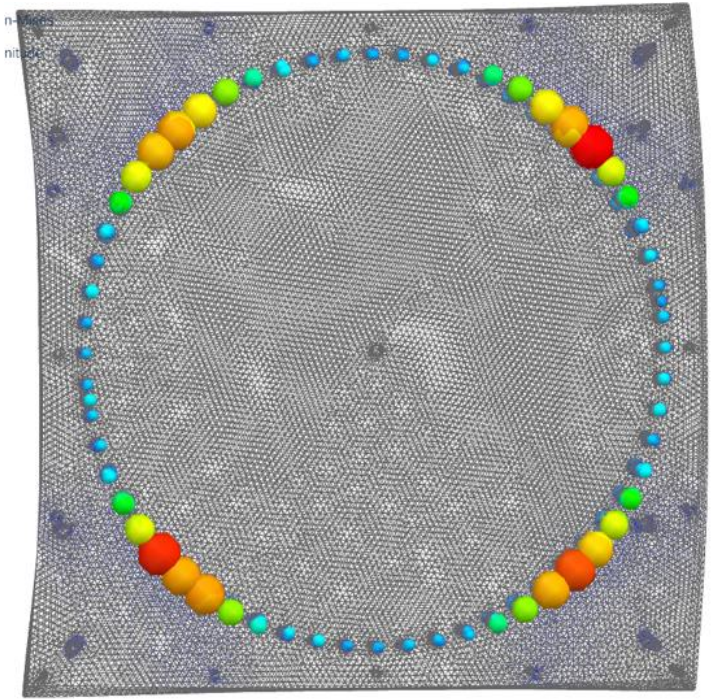

Forces on Bolts

- Bolt area under stress is 0.08783 in^2 = 56.66 mm^2
  - ST12462-37-4M

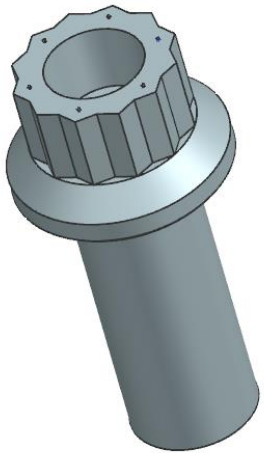

Table 5.2 Tensile and Shear Area for Inch Series Fasteners

Thread	Stress Area (in^2)			A_{shear} (4) (in^2)
	A_r (1)	A_{s1} (2)	A_{s2} (3)	
0.0600-80	.001503	.001796	.002116	.002827
0.0860-56	.003096	.003696	.004347	.005809
0.1120-40	.004964	.006033	.007208	.009852
0.1380-32	.007447	.009085	.01088	.01496
0.1640-32	.01196	.01401	.01622	.02112
0.1900-32	.01753	.01999	.02262	.02835
0.2500-28	.03255	.03637	.04040	.04909
0.3125-24	.05241	.05807	.06397	.07670
0.3750-24	.08084	.08783	.09506	.1104
0.4375-20	.1090	.1187	.1288	.1503
0.5000-20	.1486	.1600	.1717	.1964
0.5625-18	.1888	.2030	.2176	.2485
0.6250-18	.2400	.2560	.2724	.3068
0.7500-16	.3513	.3730	.3953	.4418
0.8750-14	.4805	.5095	.5392	.6013
1.0000-12	.6244	.6630	.7027	.7854

$$A_s = \frac{\pi}{4}\left(d - \frac{0.9743}{n}\right)^2 \quad \text{Eq. 5.1}$$

Where:

A_s=Stress Area (in^2)
d=Major Diameter (in)
n=Threads per Inch

Comparing Forces

- Case #1 lift configuration has lower peak load values on bolt pattern

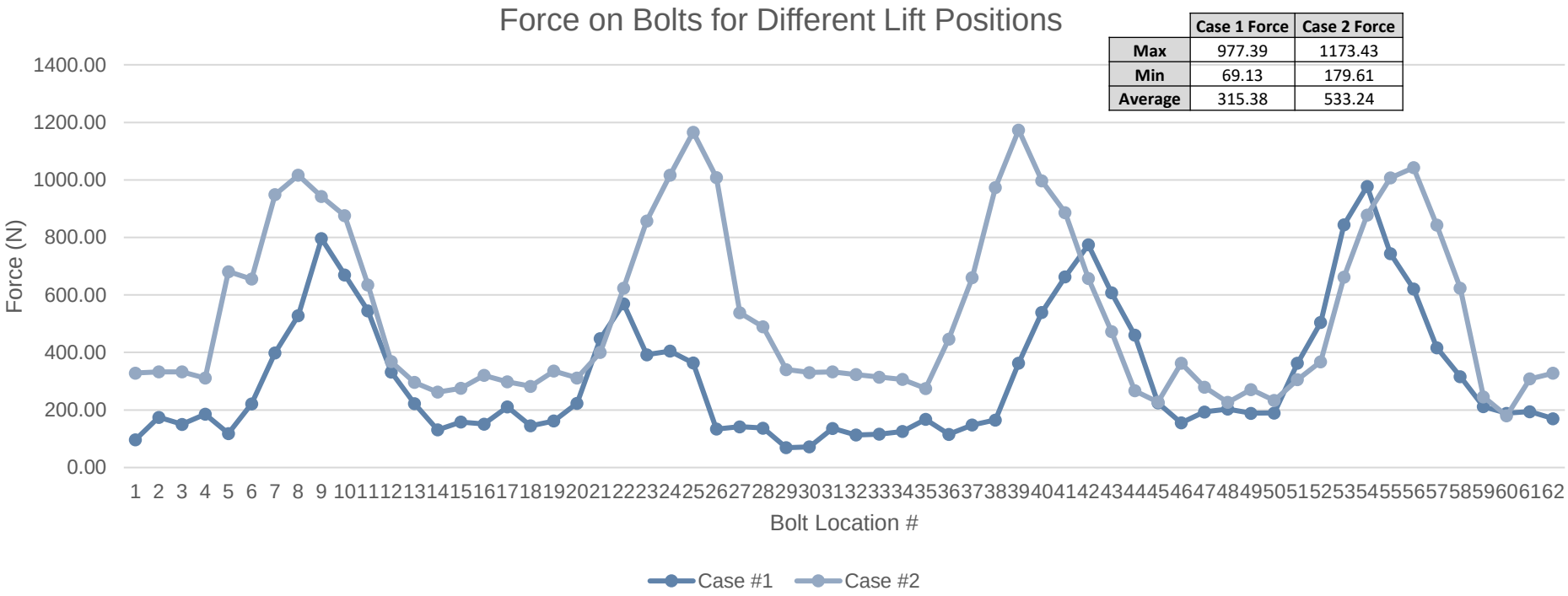

	Case 1 Force	Case 2 Force
Max	977.39	1173.43
Min	69.13	179.61
Average	315.38	533.24

Things I've Learned/Improved On

- Mechanical Design
  - NX
- FEA
- GD&T
- Storyboarding
- PowerPoint Engineering
- Fastener Analysis
- Cost Comparison and Support Cost Factors

Roses and Thorns

Roses

- Variety of different projects
- Getting to do meaningful work for a spacecraft
- Learning a lot from Greg, Nick, and Steve during our meetings
- Meeting people and hearing about all of the awesome projects going on at JPL

Thorns

- COVID and Teleworking
- Sometimes issues with computer dealing with certain assemblies or FEM
- Not being able to see the parts I worked on or tests being done

Thank You!

Jet Propulsion Laboratory
California Institute of Technology

jpl.nasa.gov